Electric Fireplace Owners Manual

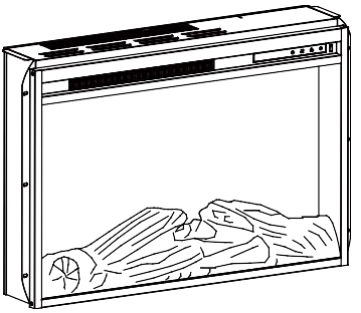

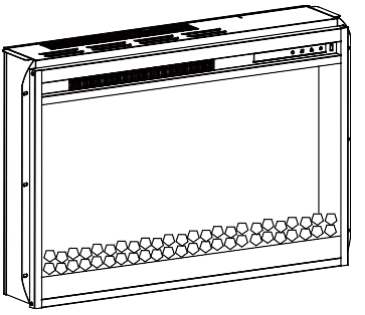

The actual appearance should be subject to the purchase model

MODELS:

CE23V60L	CE23V60L-X	(The suffix “x” denotes 1~9 and the different numbers indicated different models)
CE23V60	CE23V60-X	
CE26V60L	CE26V60L-X	
CE26V60	CE26V60-X	
CE30V60	CE30V60-X	
CE42V60L	CE42V60L-X	

IMPORTANT

PLEASE READ THESE INSTRUCTIONS CAREFULLY BEFORE INSTALLATION AND USE OF THIS ELECTRIC FIRE.
RETAIN FOR FUTURE REFERENCE.
THIS PRODUCT IS ONLY SUITABLE FOR WELL INSULATED SPACES OR OCCASIONAL USE.

This appliance is not intended for use by persons (including children) with reduced physical, sesory or learning disabilities, or lack of experience and knowledge, unless given supervision or instrution concerning use of the appliance by a person responsible for their safety.

Important Safety Advice

WHEN USING AN ELECTRICAL APPLIANCE, BASIC PRECAUTIONS SHOULD ALWAYS BE FOLLOWED TO REDUCE THE RISK OF FIRE, ELECTRIC SHOCK AND INJURY TO PERSONS, INCLUDING THE FOLLOWING IMPORTANT SAFETY ADVICE.

This instruction can be also downloaded from our company website.

Children aged from 3 years and less than 8 years shall only switch on/off the appliance provided that it has been placed or installed in its intended normal operating position and they have been given supervision or instruction concerning use of the appliance in a safe way and understand the hazards involved. Children aged from 3 years and less than 8 years shall not plug in, regulate and clean the appliance or perform user maintenance.

Children of less than 3 years should be kept away unless continuously supervised.

DO NOT cover the heater. The meaning of figure  is "WARNING! DO NOT COVER". This is to avoid over-heating of the product.

Do not use this heater in the immediate surroundings of a bath, a shower or a swimming the heater must not be located immediately below a socket outlet.

Do not use this heater with a programmer, timer, separate remote-control system or any other device that switches the heater on automatically, since a fire risk exists if the heater is covered or positioned incorrectly.

There is possible danger of installation close to curtains and other combustible materials.

CAUTION — Some parts of this product can become very hot and cause burns. Particular attention has to be given where children and vulnerable people are present.

CAUTION: In order to avoid a hazard due to inadvertent resetting of the thermal cut-out, this appliance must not be supplied through an external switching device, such as a timer, or connected to a circuit that is regularly switched on and off by the utility.

DO NOT cover or obstruct the airflow to the front of the heater. This is to avoid over-heating of the product.

DO NOT leave the heater unattended while it is in use. Always turn the appliance to the OFF position and switch off at the mains socket when not in use.

DO NOT leave children unsupervised whilst the appliance is switched on

DO NOT operate this appliance with a damaged cord or plug, or after the appliance malfunctions, has been dropped or damaged in any way.

DO NOT install a timer switch to operate the appliance.

DO NOT use this appliance as a freestanding appliance. It must always be fitted into a fireplace opening.

DO NOT insert or allow objects to enter any ventilation or exhaust openings on the appliance. To prevent possible damage do not block air intakes or exhaust openings in any manner.

DO NOT place this appliance near flammable materials, surfaces or substances, as there may be a risk of fire. Keep flammable materials, surfaces or substances at least 1 metre away from the front of the product.

DO NOT switch on the fire if volatile vapours are present in the room.

DO NOT use this appliance in any areas where petrol, paint or other flammable liquids are stored e.g. a garage or a workshop as the appliance contains components capable of producing a spark.

DO NOT let bare skin touch any hot surfaces to avoid burns and personal injury. The heater vent will get hot when in use.

DO NOT use outdoors.

CAUTION- Some parts of this product can become hot and cause burns. Particular attention has to be given where children and vulnerable people arepresent.

This appliance is for household use only.

Specification

Voltage 220 - 240VAC
Frequency: 50HZ

Unpacking

Remove and discard the plastic bag.

Be responsible when handling the packing materials.

Keep the original packaging for future transportation and/or storage.

Check all accessories are removed from the packaging before storing it away for future use.

KEEP PLASTIC BAGS AWAY FROM CHILDREN!

Installation

Installation must be carried out by a qualified and competent person.

LOCATION

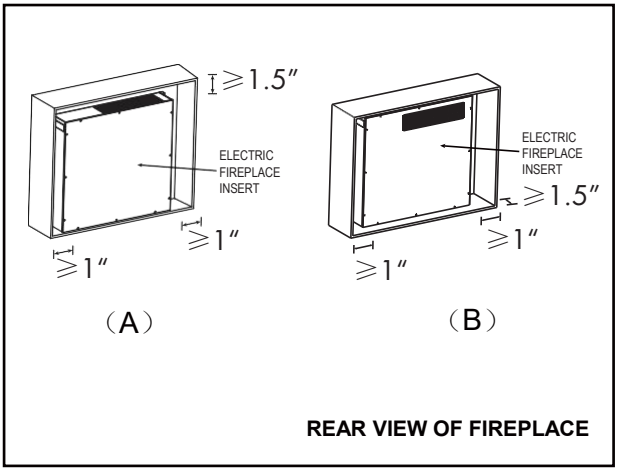

Connect the appliance to single-phase AC supply of the voltage specified on the rating plate.

Should the fire be connected directly into the mains supply, then a fused switched spur with a 13 amp fuse must be fitted. It is imperative that the power supply is capable of handling a load of 2000 watts (2kw).

Do not use an extension lead.

This appliance must be earthed.

Allow sufficient flex to enable the fire to be removed from the opening.

Always ensure that all electrical work complies with the relevant Building Regulations and the Electrical Code of Practice. All electrical work should be carried out by a qualified electrician

INSTALLING THE MEDIA

If you purchased the fireplace with crystals or pebbles, you should installing the ember beds before you install the fireplace into the mantel.

The following steps just apply for Crystals /pebbles version, For wood log version no need.

1. Remove the 4 screws on the back left and right sides of the electric fireplace that hold the glass front in place.

CAUTION: Do Not let front face panel fall forward once the screws are removed. This could break the glass or lead to damage or injury.

2. Spread Crystals onto the emberbed area.

1. Re-Install the face frame. Line up the holes on the front with the holes on the electric fireplace and insert and tighten 4 screws to hold the glass front in place.

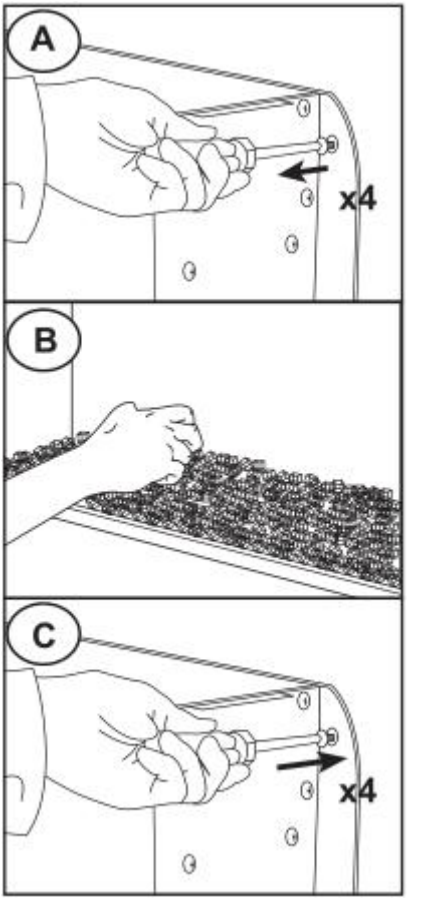

Operating the fireplace

Manual Control

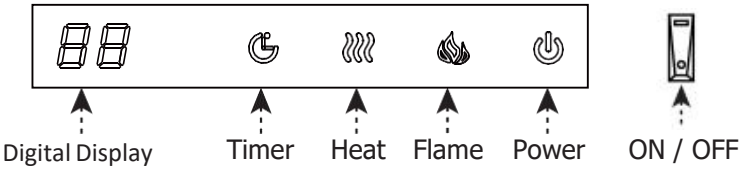

ON / OFF Power Switch

This switch is used to turn the mains supply to the fireplace ON or OFF. This needs to be in the ON position for both manual and remote operation of the fireplace.

POWER

The POWER button turns the appliance on or off. It has a memory function; the button turns off all functions at once but retains the settings in the memory. By pressing the button again, the unit will turn on at the same settings. If the TIMER has set & time has expired all functions will stop. Press the POWER button start the appliance.

FLAME

The FLAME control switch manages the flame brightness. There are 4 brightness levels and an off position. Each time the FLAME button is pressed, the intensity of the flame decrease. When adjusting the FLAME button, a number indicating the brightness of flame will be visible on the digital display.After turning on digital display, if nothing happens within 10 seconds, digital display will turn off.

HEATER

The HEATER button turns the heater on and off. When in ON position, press and hold the HEATER button 5 seconds and enter temperature adjustment mode(Note: This can't be set with the remote control). In the adjustment mode, the digital display will flash at 0.5 second intervals. There are 11 temperature settings:27℃-ON-18℃-19℃-20℃-21℃-22℃-23℃-24℃-25℃-26℃(82℉-ON-64℉-66℉-68℉-70℉-72℉-74℉-76℉-78℉-80℉) After the temperature is selected the digital display will flash 5 times and exit from setting status. After turning on the digital temperature display, if nothing happen within 10 seconds, the digital display will expire.

Temperature unit convert function: With the heater is ON the position, press and hold the power icon for 5 seconds, current temperature unit display will

flash 3 timers and convert to another temperature unit .

Lock & unlock heater function: press and hold the heater icon for 10 seconds, the ember bed will flash 6 times, indicating that the heater function is locked. To unlock the heater function, just repress and hold the heater icon for 10 seconds again, then the ember bed will also flash 6 times indicating the heater function is unlocked and to recover the original states which you have set.

TIMER

The TIMER has adjustable setting at range from 30 minutes to 6 hours and OFF. As shown the following: 30 minutes-1h-2h-3h-4h-5h-6h-OFF. If the digital display turns on and nothing happens within 10 seconds, the digital display will auto shut off. Once you have set the timer, and the timer is up, close all the functions and enter standby mode. In this mode, you should touch the power icon to restart the appliance.

Remote Control

Remove the battery cover on the back of the handset by sliding downwards and insert 2 x AAA batteries ensuring that the batteries are fitted correctly. Refit the battery cover.

Ensure that the ON / OFF Power Switch on the stove is in the ON position.

OPERATING INSTRUCTION WITH REMOTE CONTROL

Each time the fireplace receives a remote signal, the ember bed and flame blink once. It does not blink when turned on and off.

Point the remote control handset directly towards the fireplace and press the appropriate button to operate the fireplace. The handset has a memory function which will restart the fireplace with the last settings except for the Sleep timer function which will always reset to OFF.

POWER 

The Power button turns the fireplace ON or OFF.

MODE 

The mode button is used to cycle through the 3 available setting modes – Flame , sleep timer and heat.

FLAME

When the flame icon is selected, the brightness icon will blink for 5 seconds. During this period the flame effect brightness can be changed using the or buttons to select one of the four available flame effect settings

(High Medium Low , flame off and ember bed high) or OFF. If no buttons are pressed within 5 seconds the brightness icon will stop blinking and the flame brightness will be set to memory. To change the flame brightness again press the cycle button which will blink the brightness icon allowing the flame brightness to be changed. Note: The flame effect will not switch off if the fireplace is on heat.

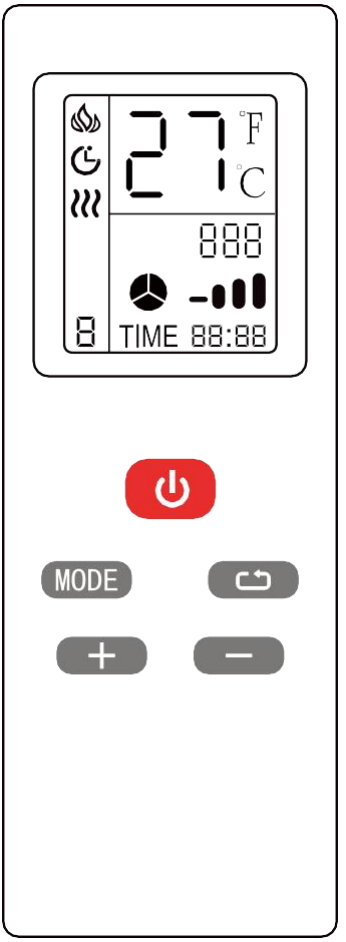

SLEEP TIMER

When the timer icon is selected, the 00 icon will blink, pressing the or buttons within 5 seconds will adjust the sleep timer range from 30 minutes- 1h-2h-3h-4h-5h-6 hours. If no buttons are pressed within 5 seconds the timer icon will stop blinking and the timer will be set to memory. To change the timer again press the cycle button which will blink the timer icon allowing the duration to be changed. To switch off the timer function set this to 00.

HEAT

When the heat icon is selected and blinking, pressing the or buttons within 5 seconds will adjust the heat ON and OFF (OF) options. If no buttons are pressed within 5 seconds the heat icon will stop blinking and the heat output will be set to memory. To adjust again press the cycle button which will blink the heat icon allowing the heat output to be changed.

Pressing the cycle button switches between heat output and room temperature setting.

When the temperature display 27℃ blinks use the or buttons within 5 seconds to set the desired room temperature (18℃ to27℃).

NOTE: If the handset temperature is set below the current room temperature then the heater will not operate until the room temperature has dropped.

To switch the temperature display between Celsius and Fahrenheit, press and hold the MODE button for 5 seconds.

Setting the Clock

Press and hold the cycle button for 5 seconds until the day number flashes. Using the or buttons set this between 1 and 7 to represent the current day of the week (1 – Monday, 2- Tuesday, 3- Wednesday etc).

Press the cycle button to highlight the TIME hour display and set using the or buttons.

Press the cycle button to highlight the TIME minute display and set using the or buttons.

Leave for 5 seconds to lock in the settings.

Energy saving function

When the heater is operating and an outside window or door is open, the ember bed will blink and may turn the heater off. This is not a malfunction. Close the door or window and press the heat button to turn the heater on again.

7 Day Programming

The heater can be programmed for 7 days. Check that the correct times are entered or the program will not work as desired.

Press and hold the POWER button for 5 seconds until the day blinks, and press the INCREASE or DECREASE buttons to choose the day to set. Then, press the CYCLE button to change the automatic operating times.

When 00 blinks, the START time can be changed. Use the INCREASE or DECREASE buttons to choose the START and STOP times between 0 and 23 hours. After setting the START time, press the CYCLE button to set the STOP time.

Push the INCREASE or DECREASE buttons one more time to set the temperature between 18°C and 27°C.

When the programming is successfully completed, the ember bed and flame will blink. Wait for 5 seconds, or press the MODE button to exit, and the display will turn off.

NOTE: If the heater is unplugged, programmed settings will be erased.

IMPORTANT

This appliance is fitted with an automatic thermal cut-out safety feature to reduce the risk of damage to the appliance in the event of overheating e.g. when covered. If the thermal cut out has detected an abnormal temperature rise within the appliance it will shut off the fan heater and will prevent it from restarting.

If this occurs switch off the fire using the ON/OFF switch and allow the appliance to cool. Ensure that there are no obstructions to the fan heater outlet or fan blades etc. Once cool, the thermal cut-out will have reset allowing you to continue safely using your fire.

If the heater is still not operating correctly after 20 minutes disconnect the appliance and call customer service.

Maintenance Instructions

Always remove the plug from the socket-outlet and allow the heater to cool down before cleaning it.

Light accumulated dust may be removed from the appliance with a soft dry cloth.

The exterior surface of the appliance can be cleaned with a soft damp cloth (not dripping wet). Dry the exterior surface before operating the heater.

Household glass cleaner can be used on the fireplace glass.

WARNING!

Do not immerse the heater in water.

Do not use any cleaning chemicals such as detergents and abrasives.

Do not allow the interior to get wet as this could create a hazard.

In the event of malfunction do not try to repair the appliance yourself as this may result in a fire hazard or electric shock.

Troubleshooting

Fault code	Fault Cause	Solution
E1	The heater overheating	Call after-sales service.
E2	NTC is defective.	Call after-sales service.
E3	The heater not working.	If the vents are dirty or clogged. Unplug the power, clean the dust and debris of the vent area. Wait for 5 minutes, plug in and turn on the heater. If the heater still don't work, please call after-sales service.

Environment



Batteries may contain hazardous substances that could be endangering to environment and human health.

• This symbol marked on the battery and/or packaging indicates that used batteries shall not be treated as municipal waste. Instead they shall be left at the appropriate collection point for recycling.

• By ensuring the used batteries are properly disposed of, you will help prevent potential negative consequences for the environment and human health. The recycling of materials will help to conserve natural resources.

At the end of the electrical products useful life it should not be disposed of with household waste. Please recycle where facilities exist. Check with your Local Authority or retailer for recycling advice in your country.

1 Year Limited Warranty

Our electrical fireplace is free from manufacturing and material defects for a period of one year from date of purchase, subject to the following conditions and limitations.

1. This electric fireplace must be installed and operated at all times in accordance with the installation and operating instructions furnished with the product, Any unauthorized repair, alteration, willful abuse, accident, or misuse of the product shall nullify this warranty.

2. This warranty is non-transferable, and is made to the original owner, provided that the purchase was made through an authorized supplier of the company.

3. The warranty is limited to the repair or replacement of parts found to be defective in material or workmanship, provided that such part(s) have been subjected to normal conditions of use and service, after said defect si confirmed by the Company' s inspection.

4. The Company may, at its discretion, fully discharge all obligation with respect to this warranty by refunding the wholesale price of the defective part(s).

5. Any installation, labor, construction, transportation, or other related costs/-expenses arising from defective part(s),repair, replacement, or otherwise of same, will not be covered by this warranty, nor shall the Company assume responsibility for same.

6. The owner/user assumes all other risks, if any, including the risk of any direct, indirect or consequential loss or damage arising out of the use, or inability to use the product, except as provided by law.

7. All other warranties-expressed of implied-with respect to the product, its components and accessories, or any obligation/liabilities on the part of the Company are hereby expressly included.

8.The Company neither assumes, nor authorizes any third party to assume,

on its behalf, any other liabilities with respect to the sale of our product.

9.The warranties as outlined within this document do not apply to non our accessories used in conjunction with the installation of this product. This warranty is void if :

a. The fireplace is subjected to prolonged periods of dampness or condensation.

b. Any unauthorized alteration, willful abuse, accident, or misuse of the product.

c. You do not have the original receipt of purchase.

Made in China

Printed in China

Table for information requirements for electric local space heaters					P
Model identifier(s): CExxVyy, CExxVyy-z, CExxVyyL, CExxVyyL-z, CExxVyyA, CExxVyyA-z (xx=18, 23, 26, 30, 42, yy=60,, z=1-9)					
Item	Symbol	Value	Unit	Item	Unit
Heat output				Type of heat input, for electric storage local space heaters only (select one)	
Nominal heat output	Pnom	1,375	kW	Manual heat charge control with integrated thermostat	[no]
Minimum heat output (indicative)	Pmin	N/A	kW	Manual heat charge control with room and/or outdoor temperature feedback	[no]
Maximum continuous heat output	Pmax	1,343	kW	Electronic heat charge control with room and/or outdoor temperature feedback	[no]
Auxiliary electricity consumption				Fan assisted heat output	[no]
At nominal heat output	elmax	N/A	kW	Type of heat output/room temperature control (select one)	
At minimum heat output	elmin	N/A	kW	Single stage heat output and no room temperature control	[no]
In standby mode	elSB	0,38	**W**	Two or more manual stages, no room temperature control	[no]
				With mechanic thermostat room temperature control	[no]
				With electronic room temperature control	[no]
				Electronic room temperature control plus	[no]

				day timer	
				Electronic room temperature control plus week timer	[yes]
				Other control options (multiple selections possible)	
				Room temperature control, with presence detection	[no]
				Room temperature control, with open window detection	[yes]
				With distance control option	[no]
				With adaptive start control	[no]
				With working time limitation	[no]
				With black bulb sensor	[no]

Remark:

For electric local space heaters, the measured seasonal space heating energy efficiency η_s cannot be worse than the declared value at the nominal heat output of the unit.